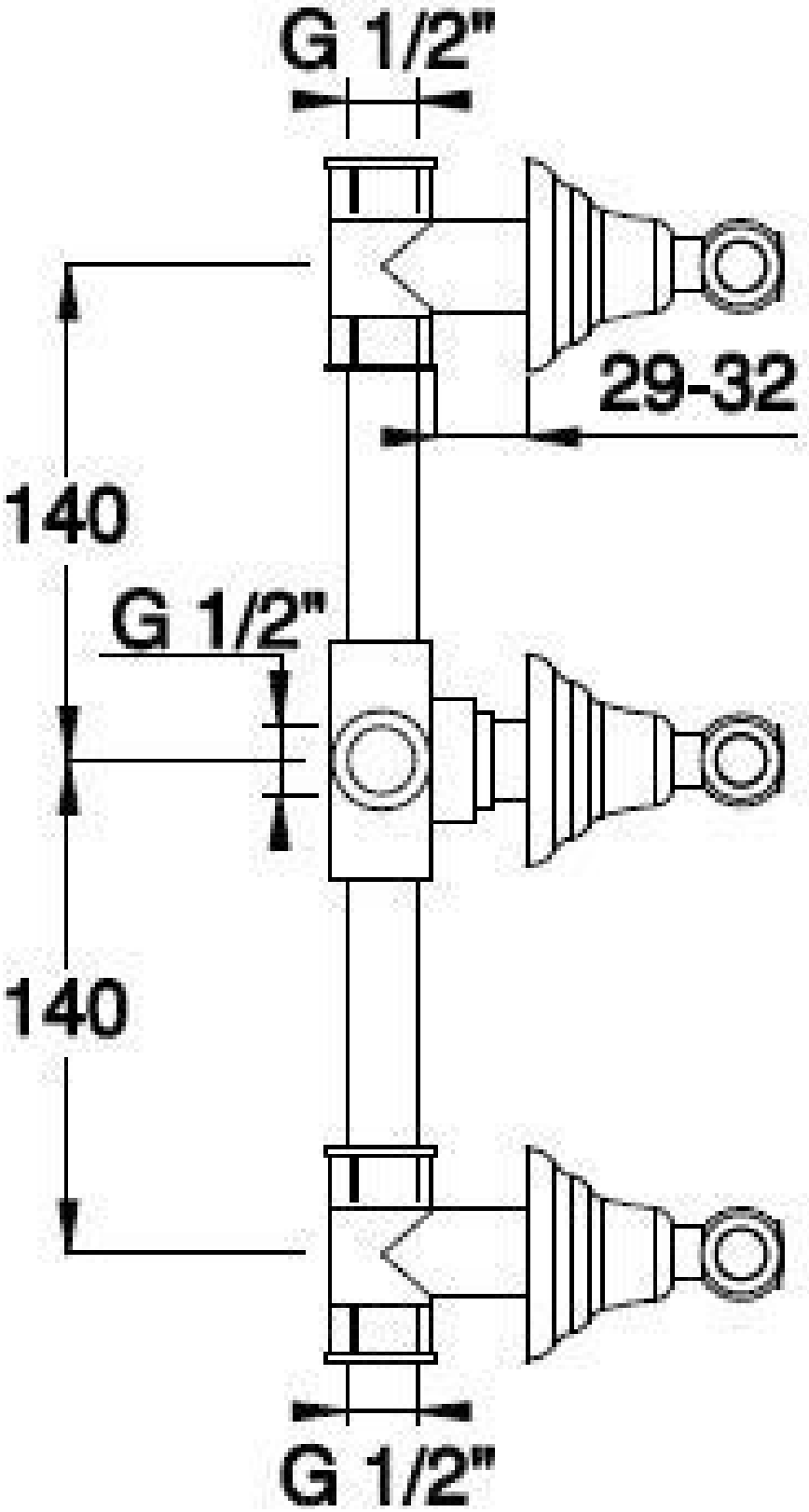
G 1/2"
29-32
140
G 1/2"
140
G 1/2"