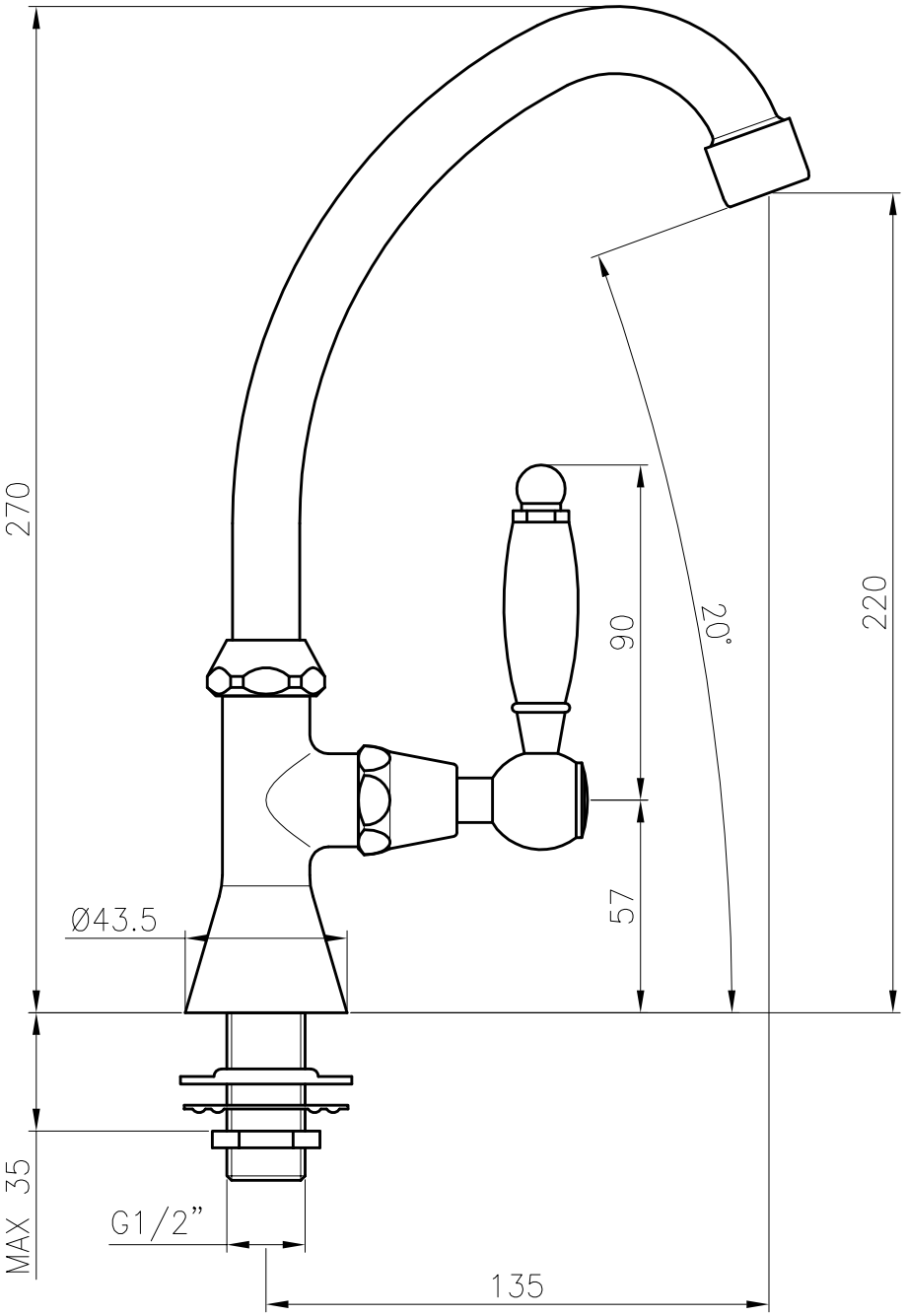
270
220
90
20°
57
Ø43.5
MAX 35
G1/2”
135